[43UL3J Set Dimension]
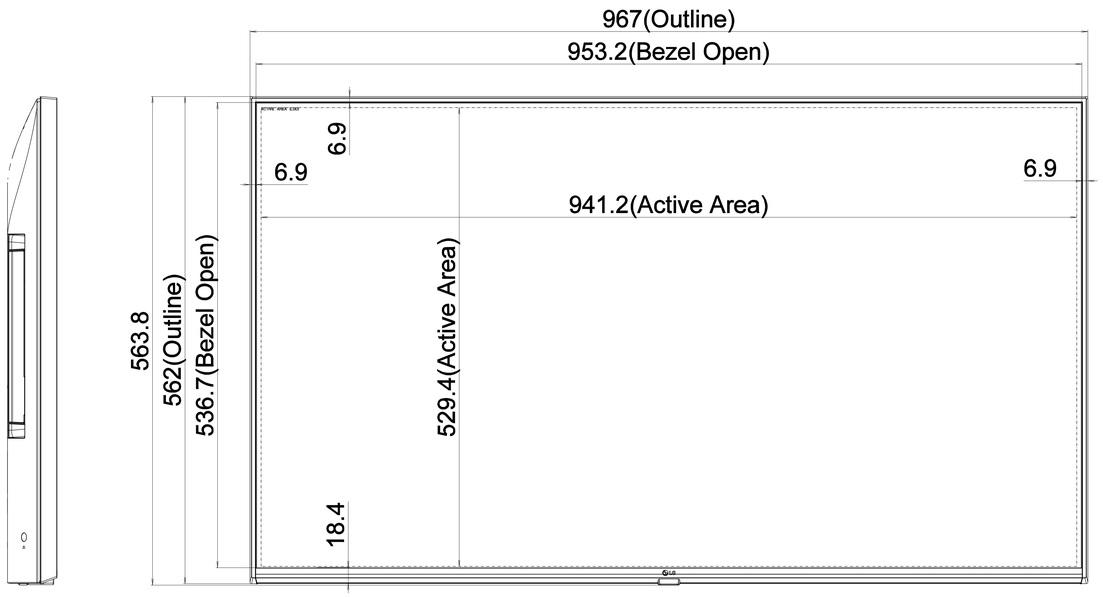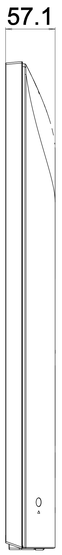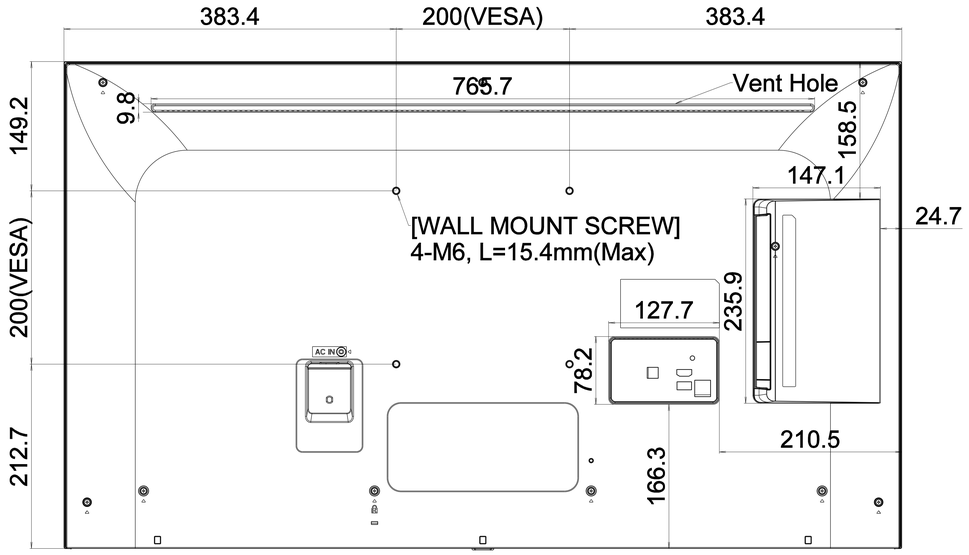
- Unit : mm
- Scale : 4/10 (Dimensions in the drawing are actual dimensions)
- Applied Model : 43UL3J All Series Model